THIS DRAWING IS UNPUBLISHED. RELEASED FOR PUBLICATION SEP ,2014.
© COPYRIGHT 2014 Tyco Electronics JAPAN G.K. ALL RIGHTS RESERVED.

LOC	DIST
J	

REVISIONS

P	LTR	DESCRIPTION	DATE	DWN	APVD
	A	RELEASED	29SEP2014	Y.A	C.O

−1 ~ −4; AS SHOWN

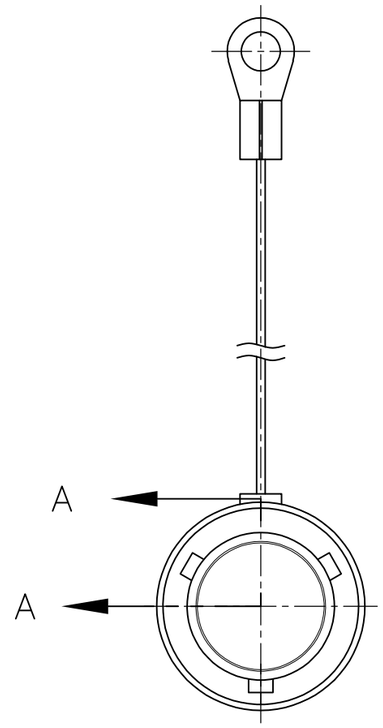

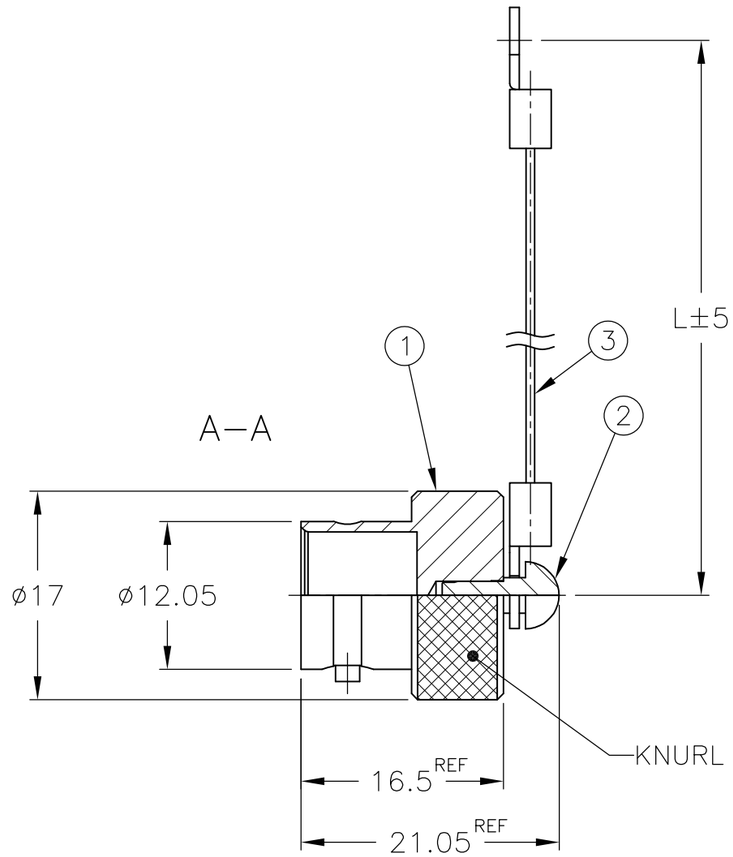

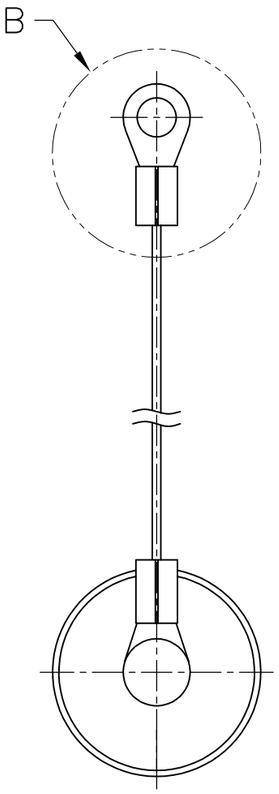

1. MATERIAL: BRASS
   FINISH: BLACK Sn−Ni
2. WIRE ROPE IS COVERD BY NYLON TUBE.

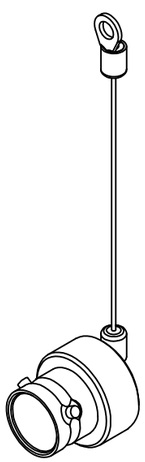

REFERENCE
SCALE 1:1

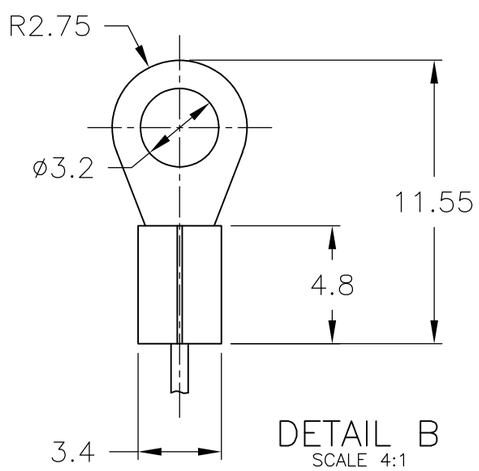

DETAIL B
SCALE 4:1

DESCRIPTION	PART NO.
19P BAYONET PLUG CAP WITH WIRE ROPE L=150mm	2287626−4
19P BAYONET PLUG CAP WITH WIRE ROPE L=120mm	2287626−3
19P BAYONET PLUG CAP WITH WIRE ROPE L=100mm	2287626−2
19P BAYONET PLUG CAP WITH WIRE ROPE L=70mm	2287626−1

THIS DRAWING IS A CONTROLLED DOCUMENT.

DIMENSIONS: mm

TOLERANCES UNLESS OTHERWISE SPECIFIED: ±0.1
0 PLC ±
1 PLC ±
2 PLC ±
3 PLC ±
4 PLC ±
ANGLES ±1°

MATERIAL
FINISH

DWN	Y.ABE	29SEP2014
CHK	H.SUZUKI	29SEP2014
APVD	C.OHASHI	29SEP2014
PRODUCT SPEC		
APPLICATION SPEC		
WEIGHT		

TE Connectivity

NAME: MSMC 19P BAYONET PLUG CAP

SIZE	CAGE CODE	DRAWING NO	RESTRICTED TO
A3	00779	C−2287626	—

CUSTOMER DRAWING | SCALE 2:1 | SHEET 1 OF 1 | REV A

1470−19 (3/11)